REV.	DESCRIPTION	DATE	DRAFTER	APPROVER
A1	DWG.REL	2020.05.28	DENG	JIN

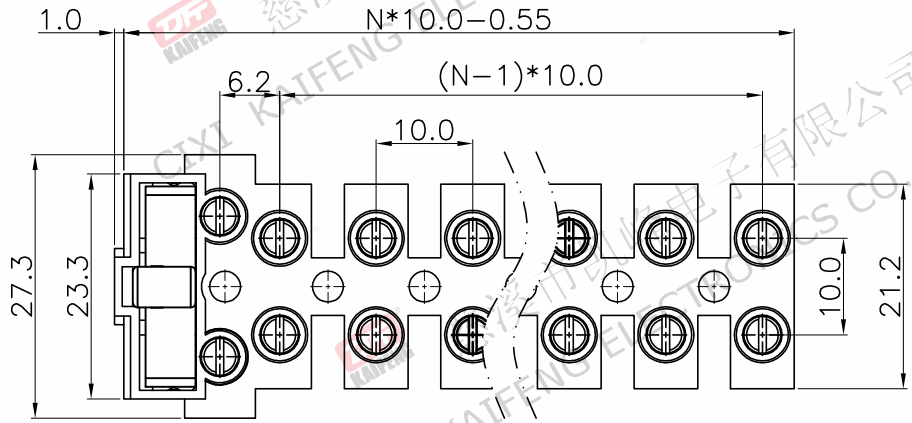

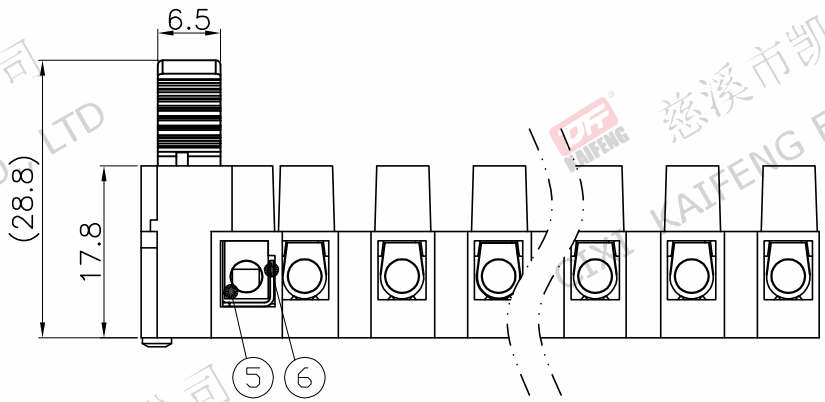

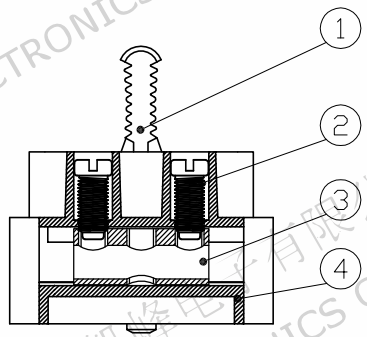

- Material
  ①Button : PA66, UL94V−0
  ②Screws : M3.0 steel, Zinc plated
  ③Clamp 1 : Copper alloy, Ni plated
  ④Housing : PA66, UL94V−0
  ⑤Clamp 2 : Copper alloy, Ni plated
  ⑥Reed : Stainless steel

- Electrical

	UL	IEC
Rated voltage :	300V	450V
Rated current :	10A	7.5A

  Contact Resistance: 20mΩ
  Insulation resistance: 500MΩ/DC500V
  Withstanding Voltage : AC2500V/1min
  Wire range: 22−14AWG 0.5~2.5mm²

- Mechanical
  Operating temperature:−40℃~+110℃
  Soldering temperature:250℃±5/5sec
  Torque: 0.5N.m (4.43Lb.in)
  Strip length:6−7mm

- RoHS compliance

HOW TO ORDER

KF100−1−10.0−XXP−1 X−XXXXX

- KF100−1: MODEL
- 10.0: Pitch:mm
- XXP: No.of poles: 2~7P
- 1: 1:Single Pitch, 2:Double Pitch
- X: Color: G:Green, R:Red, K:Black, W:White, O:Orange, B:Blue, GR:Gray
- XXXXX: Customer Request

Pitch range			Nominal dimension range						
>0 ~ 6	>6 ~ 10	>10 ~ 24	>0 ~ 30	>30 ~ 60	>60 ~ 100	>100 ~ 150	>150		0.1/10
±0.15	±0.20	±0.30	±0.30	±0.50	±0.70	±1.00	±1.30		±2°

PROJECTION		TITLE	KF100−1−10.0−XXP−1X
UNIT	mm		
SHEET SIZE	A4	SERIES	KF100−1
DRAWING TYPE	CUSTOMER DRAWING		
SCALE	1:1	SHEET	1 OF 1
DRAWING NO.	W18000112		

慈溪市凯峰电子有限公司
CIXI KAIFENG ELECTRONICS CO.,LTD